Briton

7500 Floor Spring
Installation Instructions

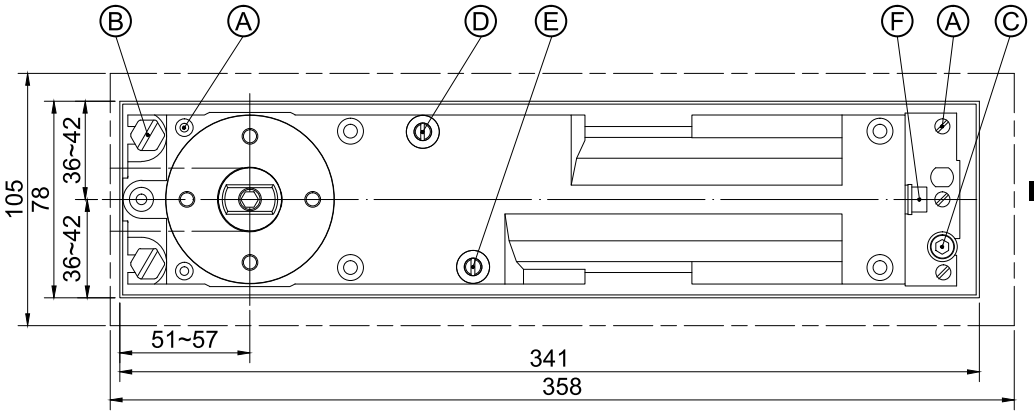

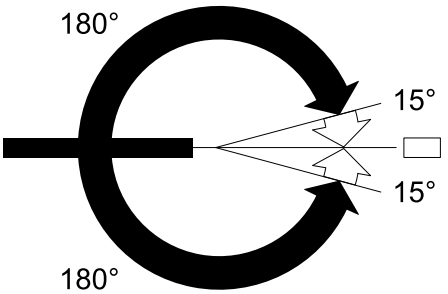

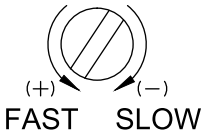

1. Adjustment of clearance between hinge jamb and door srile: Loosen screws Ⓑ and Ⓒ.
2. Adjustment of door height: Loosen screws Ⓑ, Ⓒ ,and adjust screw Ⓐ.
3. Centering door: Loosen screws Ⓑ and Ⓒ.
4. Adjustment of closing speed:
   -Two regulating valves Ⓓ and Ⓔ.
   - decrease closing speed.
   - increase closing speed.
   -Valve Ⓓ:control closing range 180°-15°
   -Valve Ⓔ:control closing range 15°-0°
5. Adjustment of spring tension Ⓕ:
   - increase spring tension
   - decrease spring tension

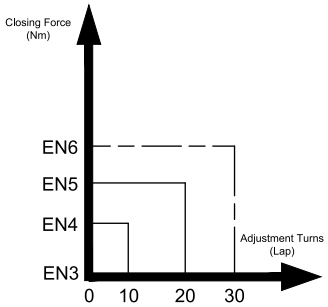

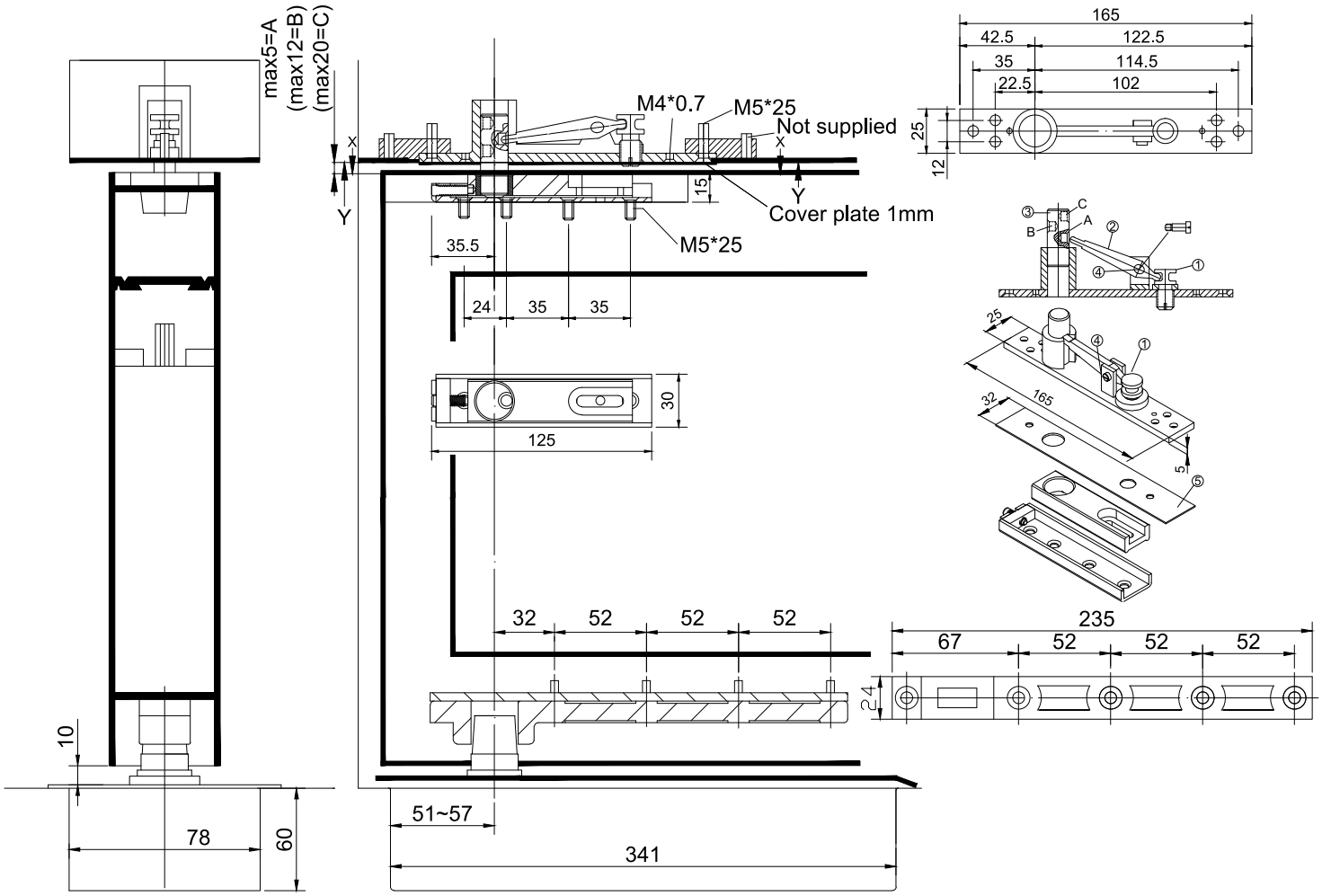

July 2013

Ingersoll Rand
Security Technologies